JOSEPH T. DUENAS
Chairman

JOHN M. BENAVENTE, P.E.
General Manager

Telephone Nos. (671) 648-3054/55 or Facsimile (671) 648-3165

Accountability · Impartiality · Competence · Openness · Value

INVITATION FOR BID (IFB) NO.: GPA-090-17
DESCRIPTION: Fuse Cutout, Open Type, 15 KV, 100 Amp.

SPECIAL REMINDERS TO PROSPECTIVE BIDDERS

Bidders are reminded to read the Sealed Bid Solicitation and Instructions, and General Terms and Conditions attached to the IFB to ascertain that all of the following requirements checked below are submitted in the bid envelope, **one (1) original, in duplicate,** at the date and time for bid opening.

(XX) BID GUARANTEE (no less than 15% of total bid) May be in the form of;
(NOTE: Cashier's Check or Certified Check Refunds will be ONLY be made out to the name of the Bidder.)

Reference #11 on the General Terms and Conditions

a. Cashier's Check or Certified Check
b. Letter of Credit or
c. Surety Bond – Valid only if accompanied by:

1. Current Certificate of Authority issued by the Insurance Commissioner;
2. Power of Attorney issued by the Surety to the Resident General Agent;
3. Power of Attorney issued by two (2) major officers of the Surety to whomever is signing on their behalf.

( ) STATEMENT OF QUALIFICATION;

( ) SAMPLES;

(XX) BROCHURES/DESCRIPTIVE LITERATURE; (Shall provide detailed literature on items offered.)

(XX) AFFIDAVIT OF DISCLOSURE OF MAJOR SHAREHOLDERS

(XX) NON-COLLUSION AFFIDAVIT;

(XX) NO GRATUITIES OR KICKBACKS AFFIDAVIT;

(XX) ETHICAL STANDARDS AFFIDAVIT;

(XX) WAGE DETERMINATION AFFIDAVIT;

(XX) RESTRICTIONS AGAINST SEX OFFENDERS AFFIDAVIT;

Note: The above Affidavits must comply with the following requirements:
a. The affidavit must be signed within 60 days of the date the bid is due;
b. Date of signature of the person authorized to sign the bid and the notary date must be the same.
c. First time affidavit **must** be an **original** – If copy, indicate Bid Number/Agency where original can be obtained.

(XX) OTHER REQUIREMENTS:
A Guam Business License and/or Contractor's License with proof of Employer Identification Number (EIN) is not required in order to provide a proposal for this engagement, but is a pre-condition for entering into a contract with the Authority. Bidders MUST comply with PL 26-111 dated June 18, 2002, PL 28-165 dated January 04, 2007 and Wage Determination under the Service Contract Act (www.wdol.gov). Additionally, upon award the successful bidder must provide to GPA the most recently issued Wage Determination by the US Dept. of Labor.

The reminder must be signed and returned in the bid envelope together with the bid. Failure to comply with the above requirements will mean a disqualification and rejection of the bid.

On this _____ day of _____ 2017, I,_____, authorized representative of _____ acknowledge receipt of this special reminder to prospective bidders with the above referenced IFB.

_____
Bidder Representative's Signature

INVITATION FOR BID

ISSUING OFFICE:
Guam Power Authority
Procurement Management Materials Supply
GPA Central Office, 1st. Floor
Gloria B. Nelson Public Service Building
688 Route 15
Mangilao, Guam 96913

for JOHN M. BENAVENTE, P.E. DATE
General Manager

DATE ISSUED: 08/22/2017
08/29/2017

BID INVITATION NO.: GPA-090-17

BID FOR: Fuse Cutout, Open Type, 15 KV, 100 Amp

SPECIFICATION: See Attached

DESTINATION: See Attached

REQUIRED DATE: 12 Weeks ARO

INSTRUCTIONS TO BIDDERS:
INDICATE WHETHER: _____ INDIVIDUAL _____ PARTNERSHIP _____ CORPORATION

INCORPORATED IN: _____

This bid shall be submitted in duplicate and sealed to the issuing office above no later than (Time) 2:00 P.M., Date: 09/05/2017 and shall be publicly opened. Bid submitted after the time and date specified above shall be rejected. See attached General Terms and Conditions and Sealed Bid Solicitation for details.

The undersigned offers and agrees to furnish within the time specified, the articles and services at the price stated opposite the respective items listed on the schedule provided, unless otherwise specified by the bidder. In consideration to the expense of the Government in opening, tabulating, and evaluating this and other bids, and other considerations, the undersigned agrees that this bid remain firm and irrevocable within one hundred twenty (120) calendar days from the date opening to supply any or all of the items which prices are quoted.

NAME AND ADDRESS OF BIDDER:

SIGNATURE AND TITLE OF PERSON AUTHORIZED TO SIGN THIS BID:

AWARD: CONTRACT NO.: _____ AMOUNT: _____ DATE: _____

ITEM NO(S). AWARDED: _____

CONTRACTING OFFICER:

JOHN M. BENAVENTE, P.E. DATE
General Manager

NAME AND ADDRESS OF CONTRACTOR:

SIGNATURE AND TITLE OF PERSON

INVITATION FOR BID NO.: GPA-090-17

Requisition No. 30700

NO.	DESCRIPTION	QTY.	U/I	U/P:	T/P:
1.0	Fuse, Cutout, Open Type, 15 KV, 100 AMP As per GPA Specifications No.: E-019, Rev. 2 GPA Index No.: SSOF0550 Reference Mfr.: ABB Reference Part No.: W1NEBNQA11 To include NEMA B Bracket (Reference: Part No.: 403A101G03) **-Approved equal or better**	600	EACH	$_____	$_____

Marking Requirements:
Stencil 1" GPA Index No./Purchase Order No./Quantity per Box.

NOTE:
1) Not withstanding the fact that this contract was written by one (1) party, it will be construed that it was written by two (2) parties.

2) Any delivery extension for this specific bid shall not be granted due to on-going and/or scheduled projects.

DELIVERY REQUIREMENT:
12 Weeks ARO

TO BE COMPLETED BY BIDDER:

MANUFACTURED BY: _____

BRAND NAME: _____

PLACE OF ORIGIN: _____

EXPORT ABROAD: _____

TIME OF DELIVERY AFTER RECEIPT OF PURCHASE ORDER: _____

Specifications reviewed by:

8/7/17

Reuben C. Ulloa Date
Inventory Management Officer

GUAM POWER AUTHORITY
AGANA, GUAM

PREPARED BY INFORMATION SYSTEMS DEPARTMENT

PAGE _____ OF _____

Rev. 2

GUAM POWER AUTHORITY
POST OFFICE BOX 2977
AGANA, GUAM 96910

TRANSMISSION AND DISTRIBUTION

SPECIFICATION No. E-019

FOR

OVERHEAD CUTOUTS

AND

ACCESSORIES

EFFECTIVE DATE: OCT 26 1987 | ISSUED: | APPROVED:

GUAM POWER AUTHORITY
AGANA, GUAM

Specification No. E-019

PAGE 1 OF 8

Rev. 2

PREPARED BY INFORMATION SYSTEMS DEPARTMENT

OVERHEAD CUTOUTS AND ACCESSORIES

TABLE OF CONTENTS

1.0 SCOPE

2.0 CONFORMANCE TO SPECIFICATION

3.0 DESIGN

4.0 MANUFACTURING

5.0 QUALITY CONTROL

6.0 PREPARATION FOR SHIPMENT

1.0 SCOPE:

This specification covers GPA's requirement for open fuse cutouts with or without load break capability to be used on the overhead system at 13.8 KV phase to phase at 60 hertz.

2.0 CONFORMANCE TO SPECIFICATIONS:

2.1 APPLICABLE DOCUMENTS

The equipment specified herein shall be designed, manufactured, assembled and tested in accordance with ANSI C37.34, ANSI C37.41, NEMA 5G6, and ANSI C37.32 latest revision unless otherwise stated herein.

2.2 ACCEPTANCE REQUIREMENTS

2.2.1 Equipment purchased under this specification will be accepted under the requirements specified herein.

2.3 DEVIATIONS AND NONCONFORMANCE REQUIREMENTS

2.3.1 Deviations from this specification or changes in the material or design after the purchase order has been placed must be approved by the GPA Engineering Department and acknowledged by an addendum to the specification which shall be issued by a Purchase Order Amendment.

2.3.2 Units received with deviations or non-conformances which are not acknowledged as specified in subparagraph 2.3.1 are subject to rejection. The Supplier of units rejected in this paragraph is responsible for any corrective action including but not limited to materials, labor, and transportation necessary to dispose of, or make the units conform to the specification.

2.3.3 Notification of defective units discovered before or after installation that are believed to be inherent to manufacturing problems or workmanship shall be made and forwarded to the Supplier. The description information, disposition and/or follow-up (as appropriate) that GPA expects from the Supplier will be specified. The Supplier's response shall be made within thirty (30) days unless an extension is acknowledged and approved in writing by the GPA Manager of Engineering.

3.0 DESIGN:

3.1 RATING AND CAPABILITIES

3.1.1 All devices shall have ratings as indicated by Table I.

TABLE I - RATINGS

15 KV DEVICES

ITEM DESCRIPTION	DESIGN VOLTAGE	B.I.L.	CONTINUOUS CURRENT RATING	MINIMUM INTERRUPTING CURRENT RMS (KA)	
	KV	KV	AMPS	SYM.	ASYM
Cutout Body	15	110	300	-	-
100 A. Fuse Holder	15	110	100	10.0	16.0
200 A. Fuse Holder	15	110	200	7.5	12.0

3.1.2 Terminal connectors shall be a bronze eyebolt design, tin plated, and shall accept conductors from 6 solid to 250 MCM aluminum or copper.

3.1.3 The cutout shall not exert more than 8 pounds of tension on the fuse link with the fuse holder in the closed position. Tension on the fuse link should not exceed 15 pounds during closing. A description of the test method used shall be submitted upon request by GPA. All surfaces that come in contact with the fuse link, such as the bottom of the fuse holder and the flipper or link ejector shall be finished in such a manner so as not to cause corrosion of the conductor.

3.1.4 The upper and trunnion contact surfaces shall be silver plated and contact aid shall be factory applied.. A lubricant shall be factory applied to all rotating pins.

3.1.5 Leakage distance minimum is given by Table II.

TABLE II

VOLTAGE CLASS KVA	MINIMUM LEAKAGE DISTANCE (INCHES)
15	11.5

3.1.6 Load break cutouts must have self contained arc-extinguishing material. The load break cutout shall have ratings indicated by Table III.

TABLE III

LOAD BREAK RATING

VOLTAGE		CURRENT		
NOMINAL	B.I.L	CONTINUOUS LOAD BREAK AMPS	INTERRUPTING SYM.	ASYM.
15 KV	110 KV	100	10,000A	16,000A
15 KV	110 KV	200	7,500A	12,000A

3.1.7 The fuse holders shall have an expendable cap.

3.2 OPERABILITY

3.2.1 Cutouts, and fuse holders, purchased under this specification shall be used for sectionalizing, fusing, and switching. They shall be operable with standard industry hotline tools and load break devices.

3.2.2 Cutouts, and fuse holders, shall be suitable for use with a loadbuster tool.

3.2.3 Clearly visible hooks shall be provided for operation on 13.8 KV overhead systems.

3.2.4 Each cutout shall be provided with brackets and hardware, a complete assembly, for crossarm mounting.

3.3 TESTING REQUIREMENTS

3.3.1 Dielectric tests shall be performed per ANSI C37.41.4. All devices shall meet the following voltage withstand levels:

TERMINAL TO GROUND

TEST	VOLTAGE (KV) 15 KV CLASS	TIME
60 Hz Dry	35	1 Min.
60 Hz Wet	30	10 Sec.
1.2 x 50 us Impulse (B.I.L.)	110	-

3.3.2 Interrupting tests shall be performed in accordance with NEMA SG2, latest revision.

3.3.3 The following tests shall be performed in accordance with ANSI C37.41, subparagraph 5, and subparagraphs C37.41-8 through C37.41-11, latest revision.

Static Pressure Test for Expendable Caps
Making Current Tests
Radio-Influence Tests
Short-Time Current Tests
Temperature Rise Tests

3.3.4 Salt fog tests shall be performed by the manufacturer according to ASTM B-117 prior to any GPA evaluation of the device. No manufacturer will be considered until this test has been completed and the results presented to GPA for Engineering evaluation.

3.4 MATERIAL

The mounting hardware and bracket shall be hot-dipped galvanized steel. All other steel including pins, clamps and bolts must be 300 series passivated stainless steel. The composition of all materials used shall be described and must be approved by GPA Engineering prior to acceptance by GPA.

4.0 MANUFACTURING:

4.1 MARKING AND IDENTIFICATION

Cutout frames and fuse holders, shall be indelibly marked with the manufacturer's name, month and year of manufacture, and the maximum voltage and current ratings.

5.0 QUALITY CONTROL:

5.1 QUALITY CONTROL PROGRAM

The manufacturer shall have a quality control program to enable them to assure compliance with our specification.

5.2 QUALITY CONTROL DOCUMENTATION

The quality control program shall be documented and available upon request for GPA review.

5.3 CERTIFIED TEST REQUIREMENTS

The following certified tests shall be performed and available to GPA Engineering and furnished when requested.

1. Temperature rise tests shall be performed per 3.3.3
2. Maximum Asymetrical and Symetrical Interrupting Tests per 3.3.2.
3. Dielectric Tests per 3.3.1.
4. Certified raw materials.

Materials	Certification Required
Fasteners and Hardware	Passivation, Series 300 Stainless Steel

6.0 PREPARATION FOR SHIPMENT:

The supplier shall have adequate work and inspection instructions for handling, interim storage, preservation, packaging, and shipping to protect the quality of fuses and prevent damage, loss, deterioration and substitution of products.

GUAM POWER AUTHORITY
AGANA, GUAM

Specification No. E-019

PAGE 7 OF 8

Rev. 2

PREPARED BY INFORMATION SYSTEMS DEPARTMENT

NON-LOAD BREAK CUTOUT

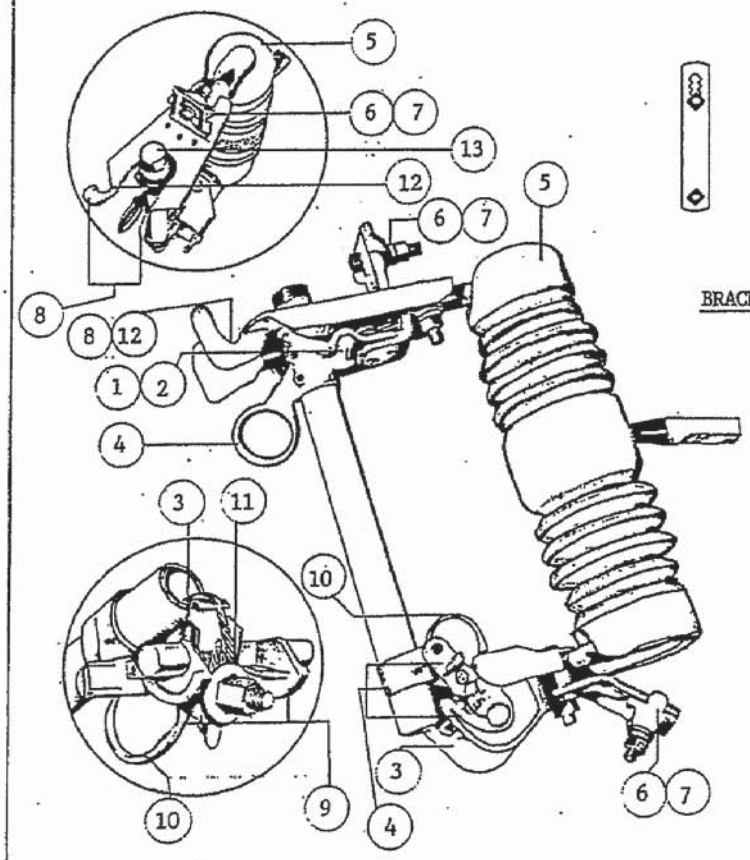

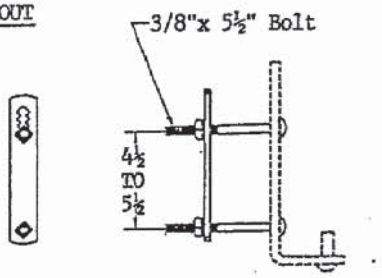

BRACKET FOR CROSSARM MOUNTING

EQUIPMENT AND DEVICES

1. Double point spring latch
2. Universal contacts
3. Spring loaded flipper
4. Alumimum bronze castings
5. Solid porcelain construction
6. Tin plated terminals
7. Centered terminals/single wrench operable
8. Guides
9. Locking cams
10. Lifting eye
11. Fuse link tension limiter
12. Hooks
13. Expendable cap

EFFECTIVE DATE: OCT 26 1987 | ISSUED: | APPROVED:

GUAM POWER AUTHORITY
AGANA, GUAM

Specification No. E-019

PAGE 8 OF 8

Rev. 2

PREPARED BY INFORMATION SYSTEMS DEPARTMENT

LOAD BREAK CUTOUT

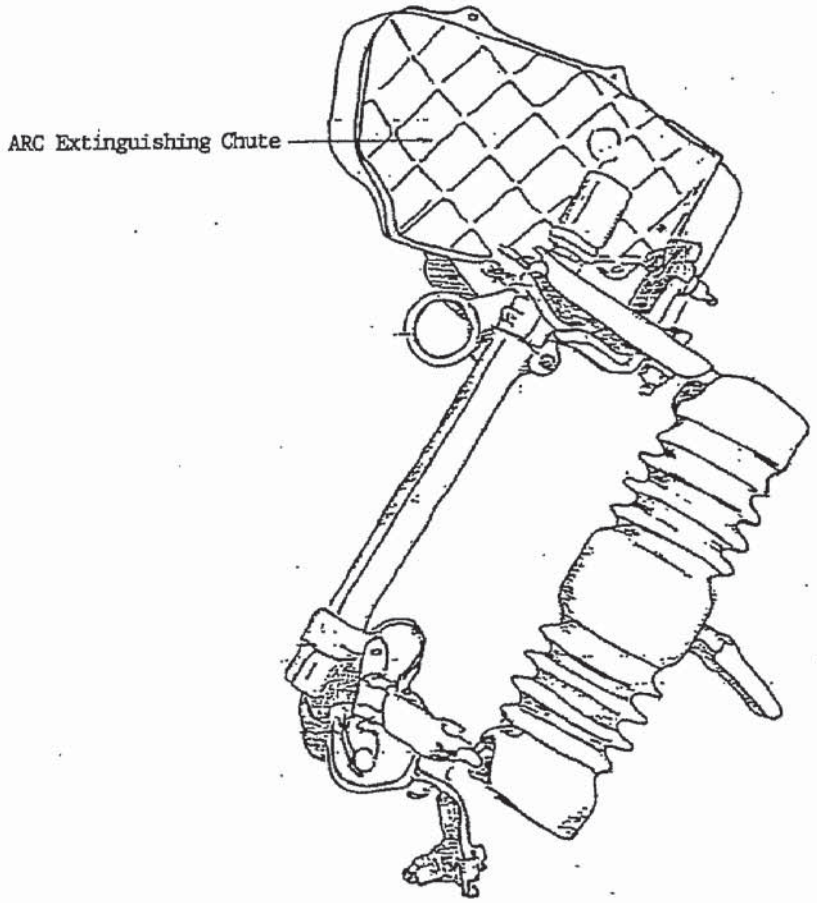

NOTE: Equipment and devices are similar to non-load break cutout.

EFFECTIVE DATE: OCT 26 1987 ISSUED: APPROVED:

GUAM POWER AUTHORITY
ATURIDÅT ILEKTRESEDÅT GUAHAN
P.O.BOX 2977 • AGANA, GUAM U.S.A. 96932-2977

Edward J.B. Calvo
Governor

Telephone Nos. (671) 648-3054/55 Fax: 648-3165

Raymond S. Tenorio
Lieutenant Governor

BID BOND

NO.: _____

KNOW ALL MEN BY THESE PRESENTS that _____, as

Principal Hereinafter called the Principal, and (Bonding Company), _____
A duly admitted insurer under the laws of the Territory of Guam, as Surety, hereinafter called the Surety are Held firmly bound unto the Territory of Guam for the sum of _____Dollars ($_____), for Payment of which sum will and truly to be made, the said Principal and the said Surety bind ourselves, our heirs, executors, administrators, successors and assigns, jointly and severally, firmly by these presents.

WHEREAS, the Principal has submitted a bid for (identify project by number and brief description)
_____
_____

NOW, THEREFORE, if the Territory of Guam shall accept the bid of the Principal and the Principal shall enter into a Contract with the Territory of Guam in accordance with the terms of such bid, and give such bond or bonds as my be specified in bidding or Contract documents with good and sufficient surety for the faithful performance of such Contract Documents with good and sufficient surety for the faithful performance of such Contract and for the prompt payment of labor and material furnished in the prosecution thereof, or in the event of the failure of the Principal to enter such Contract and give such bond or bonds, if the Principal shall pay to the Territory of Guam the difference not to exceed the penalty hereof between the amounts specified in said bid and such larger amount for which the Territory of Guam may in good faith contract with another party to perform work covered by said bid or an appropriate liquidated amount as specified in the Invitation for Bids then this obligation shall be null and void, otherwise to remain full force and effect.

Signed and sealed this _____ day of _____ 2017.

_____
(PRINCIPAL) (SEAL)

_____
(WITNESS)

_____
(TITLE)

_____
(MAJOR OFFICER OF SURETY)

_____ _____
(TITLE) (TITLE)

_____
(RESIDENT GENERAL AGENT)

SEE INSTRUCTIONS FOR SUPPORTING DOCUMENTS REQUIRED.

INSTRUCTION TO PROVIDERS:

NOTICE to all Insurance and Bonding Institutions:

The Bond requires the signatures of the Vendor, two (2) major Officers of the Surety and Resident General Agent, if the Surety is a foreign or alien surety.

When the form is submitted to the Guam Power Authority, it should be accompanied with copies of the following:

1. Current Certificate of Authority to do business on Guam issued by the Department of Revenue and Taxation.

2. Power of Attorney issued by the Surety to the Resident General Agent.

3. Power of Attorney issued by two (2) major officers of the Surety to whoever is signing on their behalf.

Bonds, submitted as Bid Guarantee, without signatures and supporting documents are invalid and Bids will be rejected.

GUAM POWER AUTHORITY
ATURIDAT ILEKTRESEDAT GUAHAN
P O BOX 2977, AGANA, GUAM 96932-2977

SPECIAL PROVISON
FOR
MAJOR SHAREHOLDERS DISCLOSURE AFFIDAVIT

All Bidders/Offerors are required to submit a current affidavit as required below. Failure to do so will mean disqualification and rejection of the bid/rfp.

5 GCA §5233 (Title 5, Section 5233) states:

"Section 5233 Disclosure of Major Shareholders. As a condition of submitting a bid or offer, any partnership, sole proprietorship or corporation doing business with the government of Guam shall submit an affidavit executed under oath that lists the name and address of any person who has held more than ten percent (10%) of the outstanding interest or shares in said partnership, sole proprietorship or corporation at any time during the twelve (12) month period immediately preceding submission of a bid, or, that it is a not for profit organization that qualifies for tax exemption under the Internal Revenue Code of the United States or the Business Privilege Tax law of Guam, Title 12, Guam Code Annotated, Section 26203©. With the exception of not for profit organizations, the affidavit shall contain the number of shares or the percentage of all assets of such partnership, sole proprietorship or corporation which have held by each such person during the twelve (12) month period. In addition, the affidavit shall contain the name and address of any person who has received or is entitled to receive a commission, gratuity or other compensation for procuring or assisting in obtaining business related to the bid or offer and shall also contain the amounts of any such commission, gratuity or other compensation. The affidavit shall be open and available to the public for inspection and copying."

1. **If the affidavit is a copy, indicate the BID/RFP number and where it is filed.**
2. **Affidavits must be signed within 60 days of the date the bids or proposals are due.**

MAJOR SHAREHOLDERS OF DISCLOSURE AFFIDAVIT

TERRITORY OF GUAM)
)
HAGATNA, GUAM)

I, undersign, _____,
(partner or officer of the company of, etc.)
being first duly sworn, deposes and says:

1. That the person who have held more than ten percent (10%) of the company's shares during the past twelve (12) months are as follows:

Name	Address	Percentage of Shares Held
_____	_____	_____
_____	_____	_____
_____	_____	_____
_____	_____	_____
	Total number of shares	_____

2. Persons who have received or are entitled a commission, gratuity or other compensation for procuring or assisting in obtaining business related to the bid/rfp for which this Affidavit is submitted are as follows:

Name	Address	Amount of Commission Gratuity or other Compensation
_____	_____	_____
_____	_____	_____

Further, affiant sayeth naught.

Date:_____

_____
Signature of individual if bidder/offeror is a sole Proprietorship; Partner, if the bidder/offeror is a Partnership Officer, if the bidder/offeror is a corporation.

Subscribe and sworn to before me this _____ day of _____,

20_____.

Notary Public _____

In and for the Territory of Guam

My Commision expires _____.

NON-COLLUSION AFFIDAVIT

Guam)
)ss:
Hagatna)

I, _____ first being duly sworn, depose and say:
(Name of Declarant)

1. That I am the _____ of _____.
(Title) (Name of Bidding/RFP Company)
2. That in making the foregoing proposal or bid, that such proposal or bid is Genuine and not collusive or shame, that said bidder/offeror has not colluded, Conspired, connived or agreed, directly or indirectly, with any bidder or person, to put in a sham or to refrain from bidding or submitting a proposal and has not in any manner, directly or indirectly, sought by agreement or collusion, or communication or conference, with any person, to fix the bid of affiant or any other bidder, or to secure any overhead, project or cost element of said bid price, or of that of any bidder, or to secure any advantage against the GUAM POWER AUTHORITY or any person interested in the proposed contract; and
3. That all statements in said proposal or bid are true.
4. This affidavit is made in compliance with Guam Administrative Rules and Regulations §§3126(b).

_____
(Declarant)

SUBSCRIBED AND SWORN to me before this _____ day of _____, 2017.

)Seal(

_____
Notary Public

NO GRATUITIES OR KICKBACKS AFFIDAVIT

AFFIDAVIT
(Offeror)

TERRITORY OF GUAM)
) SS:
HAGATNA, GUAM)

_____, being first duly sworn, deposes and says:

As the duly authorized representative of the Offeror, that neither I nor of the Offeror's officers, representatives, agents, subcontractors, or employees has or have offered, given or agreed to give any government of Guam employee or former employee, any payment, gift, kickback, gratuity or offer of employment in connection with Offeror's proposal.

_____

Signature of Individual if Proposer is a Sole Proprietorship;
Partner, if the Proposer is a Partnership;
Officer, if the Proposer is a Corporation

SUBCRIBED AND SWORN to before me this ____day of _____, 2017.

_____
Notary Public
In and for the Territory of Guam
My Commission Expires:

ETHICAL STANDARDS AFFIDAVIT

AFFIDAVIT
(Proposer)

TERRITORY OF GUAM)
) SS:
HAGATNA, GUAM)

_____, being first duly sworn, deposes and says:

That I am (the Sole Proprietor, a Partner or Officer of the Offeror)

That Offeror making the foregoing Proposal, that neither he or nor of the Offeror's officers, representatives, agents, subcontractors, or employees of the Offeror have knowingly influenced any government of Guam employee to breach any of the ethical standards set forth in 5 GCA Chapter 5 Article 11, and promises that neither he nor any officer, representative, agent, subcontractor, or employee of Offeror will knowingly influence any government of Guam employee to breach any ethical standard set for in 5 GCA Chapter 5 Article 11.

_____

Signature of Individual if Proposer is a Sole Proprietorship;
Partner, if the Proposer is a Partnership;
Officer, if the Proposer is a Corporation

SUBCRIBED AND SWORN to before me this ____day of _____, 2017.

_____
Notary Public
In and for the Territory of Guam
My Commission Expires:

DECLARATION RE-COMPLIANCE WITH U.S. DOL WAGE DETERMINATION

Procurement No.: _____

Name of Offeror Company: _____

_____ hereby certifies under penalty of perjury:

(1) That I am _____ (the offeror, a partner of the offeror, an officer of the offeror) making the bid or proposal in the foregoing identified procurement;

(2) That I have read and understand the provisions of 5 GCA § 5801 and § 5802 which read:

§ 5801. Wage Determination Established.

In such cases where the government of Guam enters into contractual arrangements with a sole proprietorship, a partnership or a corporation ('contractor') for the provision of a service to the government of Guam, and in such cases where the contractor employs a person(s) whose purpose, in whole or in part, is the direct delivery of service contracted by the government of Guam, then the contractor shall pay such employee(s) in accordance with the Wage Determination for Guam and the Northern Mariana Islands issued and promulgated by the U.S. Department of Labor for such labor as is employed in the direct delivery of contract deliverables to the government of Guam.

The Wage Determination most recently issued by the U.S. Department of Labor at the time a contract is awarded to a contractor by the government of Guam shall be used to determine wages, which shall be paid to employees pursuant to this Article. Should any contract contain a renewal clause, then at the time of renewal adjustments, there shall be made stipulations contained in that contract for applying the Wage Determination, as required by this Article, so that the Wage Determination promulgated by the U.S. Department of Labor on a date most recent to the renewal date shall apply.

§ 5802. Benefits.

In addition to the Wage Determination detailed in this Article, any contract to which this Article applies shall also contain provisions mandating health and similar benefits for employees covered by this Article, such benefits having a minimum value as detailed in the Wage Determination issued and promulgated by the U.S. Department of Labor, and shall contain provisions guaranteeing a minimum of ten (10) paid holidays per annum per employee.

(3) That the offeror is in full compliance with 5 GCA § 5801 and § 5802, as may be applicable to the procurement referenced herein;

_____

Signature of Individual if Proposer is a Sole Proprietorship;

Partner, if the Proposer is a Partnership;

Officer, if the Proposer is a Corporation

SUBCRIBED AND SWORN to before me this ____day of _____, 2017.

_____

Notary Public
In and for the Territory of Guam
My Commission Expires:

SPECIAL PROVISIONS

Restriction Against Sex Offenders Employed by Service Providers to Government of Guam from Working on Government of Guam Property

GCA 5 §5253 Restriction Against Contractors Employing Convicted Sex Offenders from Working at Government of Guam Venues:

(a) No person convicted of a sex offense under the provisions of Chapter 25 of Title 9 Guam Code Annotated, or an offense as defined in Article 2 of Chapter 28, Title 9 GCA in Guam, or an offense in any jurisdiction which includes, at a minimum, all of the elements of said offenses, or who is listed on the Sex Offender Registry, and who is employed by a business contracted to perform services for an agency or instrumentality of the government of Guam, shall work for his employer on the property of the Government of Guam other than public highway.

(b) All contracts for services to agencies listed herein shall include the following provisions: (1) warranties that no person providing services on behalf of the contractor has been convicted of a sex offense under the provisions of Chapter 25 of Title 9 GCA or an offense as defined in Article 2 of Chapter 28, Title 9 GCA, or an offense in another jurisdiction with, at a minimum, the same elements as such offenses, or who is listed on the Sex Offender Registry; and (2) that if any person providing services on behalf of the contractor is convicted of a sex offense under the provisions of Chapter 25 of Title 9 GCA or an offense as defined in Article 2 of Chapter 28, Title 9 GCA or an offense in another jurisdiction with, at a minimum, the same elements as such offenses, or who is listed on the Sex Offender Registry, that such person will be immediately removed from working at said agency and that the administrator of said agency be informed of such within twenty-four (24) hours of such conviction.

(c) Duties of the General Services Agency or Procurement Administrators. All contracts, bids, or Requests for Proposals shall state all the conditions in § 5253(b).

(d) Any contractor found in violation of § 5253(b), after notice from the contracting authority of such violation, shall, within twenty-four (24) hours, take corrective action and shall report such action to the contracting authority. Failure to take corrective action within the stipulated period may result in the temporary suspension of the contract at the discretion of the contracting authority.

SOURCE: *Added by P.L. 28-024:2 ((Apr. 21, 2005). Amended by P.L. 28-098:2 (Feb. 7, 2006).*

_____
Signature of Bidder Date

Proposer, if an individual;
Partner, if a partnership;
Officer, if a corporation.

Subscribed and sworn before me this _____ day of _____, 2017.

_____
Notary Public

GUAM POWER AUTHORITY
ATURIDÅT ILEKTRESEDÅT GUAHAN
P.O.BOX 2977 • AGANA, GUAM U.S.A. 96932-2977

Edward J.B. Calvo
Governor

Telephone Nos. (671) 648-3054/55 Fax: 648-3165

Raymond S. Tenorio
Lieutenant Governor

LOCAL PROCUREMENT PREFERENCE APPLICATION

Based on the law stipulated below, please place a checkmark or an "X" on the block indicating the item that applies to your business:

5GCA, Chapter 5, Section 5008, "Policy in Favor of Local Procurement" of the Guam Procurement Law states:

> All procurement of supplies and services shall be made from among businesses licensed to do business on Guam and that maintains an office or other facility on Guam, whenever a business that is willing to be a contractor is:

( ) (a) A licensed bonafide manufacturing business that adds at least twenty-five percent (25%) of the value of an item, not to include administrative overhead, suing workers who are U.S. Citizens or lawfully admitted permanent residents or nationals of the United States, or persons who are lawfully admitted to the United States to work, based on their former citizenship in the Trust Territory for the Pacific Islands; or

( ) (b) A business that regularly carries an inventory for regular immediate sale of at least fifty percent (50%) of the items of supplies to be procured; or

( ) (c) A business that has a bonafide retail or wholesale business location that regularly carries an inventory on Guam of a value of at least one half of the value of the bid or One Hundred Fifty Thousand Dollars ($150,000.0) whichever is less, of supplies and items of a similar nature to those being sought; or

( ) *(d) A service actually in business, doing a substantial business on Guam, and hiring at least 95% U.S. Citizens, lawfully admitted permanent residents or national of the Unites States, or persons who lawfully admitted to the United States to work, based on their citizenship in any of the nations previously comprising the Trust Territory of the Pacific Islands.

- Bidders indicating qualification under (d) may be considered QUALIFIED for the Local Procurement Preference **only if** the Government's requirement is for service. Service is defined Pursuant to 5 GCA Government Operations Subparagraph 5030 entitled DEFINITIONS under Chapter 5 of the Guam Procurement Law.

1. I _____, representative for _____, have read the requirements of the law cited above and do hereby qualify and elect to be given the LOCAL PROCUREMENT PREFERENCE for Bid No.: GPA _____.
   By filling in this information and placing my signature below, I understand that the Guam Power Authority will review this application and provide me with a determination whether or not the 15% preference will be applied to this bid.

2. I _____, representative for _____, have read the requirements of the law cited above, and do not wish to apply for the Local Procurement Preference for Bid No.: GPA _____.

_____
Bidder Representative Signature

_____
Date

NOTE:
Prospective Bidders not completing this form will automatically be not considered for Local Procurement Preference. Non-completion of this form is not a basis for rejection of the bid or proposal.

GOVERNMENT OF GUAM

GENERAL TERMS AND CONDITIONS

SEALED BID SOLICITATION AND AWARD

Only those Boxes checked below are applicable to this bid.

[X] 1. **AUTHORITY:** This solicitation is issued subject to all the provision of the Guam Procurement Act (5GCA, Chapter 5) And the Guam Procurement Regulations (copies of both are available at the Office of the Complier of laws, Department of Law, copies available for inspection at the Guam Power Authority). It requires all parties involved in the Preparation, negotiation, performance, or administration of contracts to act in good faith.

[X] 2. **GENERAL INTENTION**: Unless otherwise specified, it is the declared and acknowledged intention and meaning of these General Terms and conditions for the bidder to provide the Government of Guam (Government) with specified services or with materials, supplies or equipment completely assembled and ready for use.

[X] 3. **TAXES**: Bidders are cautioned that they are subject to Guam Income Taxes as well as all other taxes on Guam Transactions. Specific information on taxes may be obtained from the Director of Revenue and Taxation.

[X] 4. **LICENSING**: Bidders are cautioned that the Government will not consider for award any offer submitted by a bidder who has not complied with the Guam Licensing Law. Specific information on licenses may be obtained from the Director of Revenue and Taxation.

[X] 5. **LOCAL PROCUREMENT PREFERENCE**: All procurement of supplies and services where possible, will be made from among businesses licensed to do business on Guam in accordance with section 5008 of the Guam Procurement Act (5GCA, Chapter 5) and Section 1-104 of the Guam Procurement Regulations.

[X] 6. **COMPLIANCE WITH SPECIFICATIONS AND OTHER SOLICITATION REQUIREMENTS**: Bidders shall comply with all specifications and other requirements of the Solicitation.

[ ] 7. **"ALL OR NONE" BIDS**: Unless otherwise allowed under this Solicitation. "all or none" bids may be deemed to be non-responsive. If the bid is so limited, the Government may reject part of such proposal and award on the remainder.

NOTE: By checking this item, the Government is requesting all of the bid items to be bided or none at all. **The Government will not award on an itemized basis.** Reference: Section 3-101.06 of the Guam Procurement Regulations.

[X] 8. **INDEPENDENT PRICE DETERMINATION**: The bidder, upon signing the Invitation for Bid, certifies that the prices in his bid were derived at without collusion, and acknowledge that collusion and anti-competitive practices are prohibited by law. Violations will be subject to the provision of Section 5651 of that of the Guam Procurement Act. Other existing civil, criminal or administrative remedies are not impaired and may be in addition to the remedies in Section 5651 of the Government code.

[X] 9. **BIDDER'S PRICE**: The Government will consider not more than two (2) (Basic and Alternate) item prices and the bidder shall explain fully each price if supplies, materials, equipment, and/or specified services offered comply with specifications and the products origin. Where basic or alternate bid meets the minimum required specification, cost and other factors will be considered. Failure to explain this requirement will result in rejection of the bid.

[X] 10. **BID ENVELOPE**: Envelope shall be sealed and marked with the bidder's name, Bid number, time, date and place of Bid Opening.

[X] 11. **BID GUARANTEE REQUIREMENT**: Bidder is required to submit a Bid Guarantee Bond or standby irrevocable Letter of Credit or Certified Check or Cashier's Check in the same bid envelope to be held by the Government pending award. The Bid Guarantee Bond, Letter of Credit, Certified Check or Cashier's Check must be issued by any local surety or banking institution licensed to do business on Guam and made payable to the Guam Power Authority in the amount of fifteen percent (15%) of his highest total bid offer. The Bid Bond must be submitted on Government Standard Form BB-1 (copy enclosed). Personal Checks will not be accepted as Bid Guarantee. If a successful Bidder (contractor) withdraws from the bid or fails to enter into contract within the prescribed time, such Bid guarantee will be forfeited to the Government of Guam. Bids will be disqualified if not accompanied by Bid Bond, Letter of Credit, Certified Check or Cashier's check. Bidder must include in his/her bid, valid copies of a Power of Attorney from the Surety and a Certificate of Authority from the Government of Guam to show proof that the surety company named on the bond instrument is authorized by the Government of Guam and qualified to do business on Guam. For detailed information on bonding matters, contact the Department of Revenue and Taxation. Failure to submit a valid Power of Attorney and Certificate of Authority on the surety is cause for rejection of bid. (GPR Section 3-202.03.3) **Pursuant to Public Law 27-127, all competitive sealed bidding for the procurement of supplies or services exceeding $25,000.00 a 15% Bid Security of the total bid price must accompany the bid package.**

[X] 12. **PERFORMANCE BOND REQUIREMENT:** The Bidder may be required to furnish a Performance Bond on Government Standard Form BB-1 or standby irrevocable Letter of Credit or Certified Check or Cashier's Check payable to the Guam Power Authority issued by any of the local Banks or Bonding Institution in the amount equal to Fifteen Percent (15%) of the contract prices as security for the faithful performance and proper fulfillment of the contract. In the event that any of the provisions of this contract are violated by the contractor, the Chief Procurement

Officer shall serve written notice upon both the contractor and the Surety of its intention to terminate the contract. Unless satisfactory arrangement or correction is made within ten (10) days of such notice the contract shall cease and terminate upon the expiration of the ten (10) days. In the event of any such termination, the Chief Procurement Officer shall immediately serve notice thereof upon the Surety. The Surety shall have the right to take over and perform the contract, provided, however, that if the Surety does not commence performance thereof within 10 days from the date of the mailing of notice of termination, the Government may take over and prosecute the same to complete the contract or force account for the account and at the expense of the contractor, and the contractor and his Surety shall be liable to the Government for any excess cost occasioned the Government thereby (GPR Section 3-202.03.4).

[X] 13. **PERFORMANCE GUARANTEE**: Bidders who are awarded a contract under this solicitation, guarantee that goods will be delivered or required services performed within the time specified. Failure to perform the contract in a satisfactory manner may be cause for suspension or debarment from doing business with the Government and to enforce Section 23 of these General Terms and Conditions. In addition, the Government will hold the Vendor liable and will enforce the requirements as set forth in Section 41 of these General Terms and Conditions.

[X] 14. **SURETY BONDS**: Bid and Performance Bonds coverage must be signed or countersigned in Guam by a foreign or alien surety's resident general agent. The surety must be an Insurance Company, authorized by the government of Guam and qualified to do business in Guam. Bids will be disqualified if the Surety Company does not have a valid Certificate of Authority from the Government of Guam to conduct business in Guam.

[X] 15. **COMPETENCY OF BIDDERS**: Bids will be considered only from the such bidders who, in the opinion of the Government, can show evidence of their ability, experience, equipment, and facilities to render satisfactory service.

[X] 16. **DETERMINATION OF RESPONSIBILITY OF BIDDERS**: The Chief Procurement Officer reserves the right for securing from bidders information to determine whether or not they are responsible and to inspect plant site, place of business; and supplies and services as necessary to determine their responsibility in accordance with Section 15 of these General Terms and Conditions (GPR Section 3-401).

[X] 17. **STANDARD FOR DETERMINATION OF LOWEST RESPONSIBLE BIDDER**: In determining the lowest responsible offer, the Chief Procurement Officer shall be guided by the following:

a) Price of items offered.
b) The ability, capacity, and skill of the Bidder to perform.
c) Whether the Bidder can perform promptly or within the specified time.
d) The quality of performance of the Bidder with regards to awards previously made to him.
e) The previous and existing compliance by the Bidder with laws and regulations relative to procurement.
f) The sufficiency of the financial resources and ability of the Bidder to perform.
g) The ability of the bidder to provide future maintenance and services for the subject of the award.
h) **The compliance with all of the conditions to the Solicitation.**

[X] 18. **TIE BIDS**: If the bids are for the same unit price or total amount in the whole or in part, the Chief Procurement Officer will determine award based on Section 3.202.15.2, or to reject all such bids (GPR Section 3-202.15.2).

[ ] 19. **BRAND NAMES**: Any reference in the Solicitation to manufacturer's Brand Names and number is due to lack of a satisfactory specification of commodity description. Such preference is intended to be descriptive, but nor restrictive and for the sole purpose of indicating prospective bidders a description of the article or services that will be satisfactory. Bids on comparable items will be considered provided the bidder clearly states in his bid the exact articles he is offering and how it differs from the original specification.

[X] 20. **DESCRIPTIVE LITERATURE**: Descriptive literature(s) as specified in this solicitation must be furnished as a part of the bid and must be received at the date and time set for opening Bids. The literature furnished must clearly identify the item(s) in the Bid. The descriptive literature is required to establish, for the purpose of evaluation and award, details of the product(s) the bidder proposes to furnish including design, materials, components, performance characteristics, methods of manufacture, construction, assembly or other characteristics which are considered appropriate. Rejection of the Bid will be required if the descriptive literature(s) do not show that the product(s) offered conform(s) to the specifications and other requirements of this solicitation. Failure to furnish the descriptive literature(s) by the time specified in the Solicitation will require rejection of the bid.

[ ] 21. **SAMPLES**: Sample(s) of item(s) as specified in this solicitation must be furnished as a part of the bid and must be received at the date and time set for opening Bids. The sample(s) should represent exactly what the bidder proposes to furnish and will be used to determine if the item(s) offered complies with the specifications. Rejection of the Bid will be required if the sample(s) do not show that the product(s) offered conform(s) to the specifications and other requirements of this solicitation. Failure to furnish the sample(s) by the time specified in the Solicitation will require rejection of the Bid.

[X] 22. **LABORATORY TEST**: Successful bidder is required to accompany delivery of his goods with a Laboratory Test Report indicating that the product he is furnishing the Government meets with the specifications. This report is on the bidder's account and must be from a certified Testing Association.

[X] 23. **AWARD, CANCELLATION, & REJECTION**: Award shall be made to the lowest responsible and responsive bidder, whose bid is determined to be the most advantageous to the Government, taking into consideration the evaluation factors set forth in this solicitation. No other factors or criteria shall be used in the evaluation. The right is reserved as the interest of the Government may require to waive any minor irregularity in bid received. The Chief Procurement Officer shall have the authority to award, cancel, or reject bids, in whole or in part for any one or more items if he determines it is in the public interest. Award issued to the lowest responsible bidder within the specified time for acceptance as indicated in the solicitation, results in a bidding contract without further action by either party. In case of an error in the extension of prices, unit price will govern. It is the policy of the Government to award contracts to qualified local bidders. The government reserves the right to increase or decrease the quantity of the items for award and make additional awards for the same type items and the vendor

agrees to such modifications and additional awards based on the bid prices for a period of thirty (30) days after original award. No. award shall be made under this solicitation which shall require advance payment or irrevocable letter of credit from the government (GPR Section 3-202.14.1).

[X] 24. **MARKING**: Each outside container shall be marked with the Purchase Order number, item number, brief tem description and quantity. Letter marking shall not be less than 3/4" in height.

[X] 25. **SCHEDULE FOR DELVERY**: Successful bidder shall notify the Guam Power Authority, least twenty-four (24) hours before delivery of any item under this solicitation.

[ ] 26. **BILL OF SALE**: Successful supplier shall render Bill of Sale for each item delivered under this contract. Failure to comply with this requirement will result in rejection of delivery. The Bill of Sale must accompany the items delivered but will not be considered as an invoice for payment. Supplier shall bill the Government in accordance with billing instructions as indicated on the Purchase Order.

[X] 27. **MANUFACTURER'S CERTIFICATE**: Successful bidder is required, upon delivery of any item under this contract, to furnish a certificate from the manufacturer indication that the goods meet the specifications. Failure to comply with this request will result in rejection of delivery payment. Supplier shall bill the Government in accordance with billing instructions as indicated on the Purchase Order.

[X] 28. **INSPECTION**: All supplies, materials, equipment, or services delivered under this contract shall be subject to the inspection and/or test conducted by the Government at destination. If in any case the supplies, materials, equipment, or services are found to be defective in material, workmanship, performance, or otherwise do not conform with the specifications, the Government shall have the right to reject the items or require that they be corrected. The number of days required for correction will be determined by the Government.

[ ] 29. **MOTOR VEHICLE SAFETY REQUIREMENTS**: The Government will only consider Bids on motor vehicles which comply with the requirements of the National Traffic and Motor Vehicle safety Act of 1966 (Public Law 89-563) and Clean Air Act as amended (Public Law 88-206), that are applicable to Guam. Bidders shall state if the equipment offered comply with these aforementioned Federal Laws.

[ ] 30. **SAFETY INSPECTION**: All motor vehicles delivered under this contract must pass the Government of Guam Vehicle Inspection before delivery at destination.

[X] 31. **GUARANTEE**:

a)Guarantee of Vehicle Type of Equipment:
The successful bidder shall guarantee vehicular type of equipment offered against defective parts, workmanship, and performance, for a period of not less than one (1) year after date of receipt of equipment. Bidder shall also provide service to the equipment for at least one (1) year. Service to be provided shall include, but will not be limited to tune ups (change of spark plugs, contact points and condensers) and lubrication (change of engine and transmission oil). All parts and labor shall be at the expense of the bidder. All parts found defective and not caused by misuse, negligence or accident within the guarantee period shall be repaired, replaced, or adjusted within six (6) working days after notice from the Government and without cost to the Government. Vehicular type of equipment as used in this context shall include equipment used for transportation as differentiated from tractors, backhoes, etc.

b) Guarantee of Other Type of Equipment:
The successful bidder shall guarantee all other types of equipment offered, except those mentioned in 31a, above, against defective parts, workmanship, and performance for a period of not less than three (3) months after date of receipt of equipment. Bidder shall also provide service to the equipment for at least three (3) months. All parts found defective within that period shall be repaired or replaced by the Contractor without cost to the Government. Repairs, adjustments or replacements of defective parts shall be completed by the contractor within six (6) working days after notice from the Government.

c) **Compliance with this Section is a condition of this Bid.**

[X] 32. **REPRESENTATION REGARDING ETHICS IN PUBLIC PROCUREMENT**: The bidder or contractor represents that it has not knowingly influenced and promises that it will not knowingly influence a Government employee to breach any of the ethical standards and represents that it has not violated, is not violating, and promises that it will not violate the prohibition against gratuities and kickbacks set forth on Chapter 11 (Ethics in Public Contracting) of the Guam Procurement Act and in Chapter 11 of the Guam Procurement Regulations.

[X] 33. **REPRESENTATION REGARDING CONTINGENT FEES**: The contractor represents that it has not retained a person to solicit or secure a Government contract upon an agreement or understanding for a commission, percentage, brokerage, or contingent fee, except for retention of bona fide employees or bona fide established commercial selling agencies for the purpose of securing business (GPR Section 11-207).

[X] 34. **EQUAL EMPLOYMENT OPPORTUNITY**: Contractors shall not discriminate against any employee or applicant of employment because of race, color, religion, se, or national origin. The contractor will take affirmative action to ensure that employees are treated equally during employment without regards to their race, color, religion, sex, or national origin.

[X] 35. **COMPLIANCE WITH LAWS**: Bidders awarded a contract under this Solicitation shall comply with the applicable standard, provisions, and stipulations of all pertinent Federal and/or local laws, rules, and regulations relative to the performance of this contract and the furnishing of goods.

[ ] 36. **CHANGE ORDER**: Any order issued relative to awards made under this solicitation will be subject to and in accordance with the provisions of Section 6-101-03.1 of the Guam Procurement Regulations.

[ ] 37. **STOP WORK ORDER**: Any stop work order issued relative to awards made under this solicitation

will be subject to and in accordance with the provisions of Section 6-101-04.1 of the Guam Procurement Regulations.

[X] 38. **TERMINATION FOR CONVENIENCE**: Any termination order for the convenience of the Government issued relative towards made under this solicitation will be subject to and in accordance with the provisions of Section 6-101.10 of the Government Procurement Regulations.

[X] 39. **TIME FOR COMPLETION**: It is hereby understood and mutually agreed by and between the contractor and the Government that the time for delivery to final destination or the timely performance of certain services is an essential condition of this contract. If the contractor refuses or fails to perform any of the provisions of this contract within the time specified in the Purchase Order (from the date Purchase Order is acknowledged by vendor), then the contractor is in default. Defaults will be treated subject to and in accordance with the provisions of Section 6-101-08 of the Guam Procurement Regulations.

[X] 40. **JUSTIFICATION OF DELAY**: Bidders who are awarded contracts under this Solicitation, guarantee that the goods will be delivered to their destination or required services rendered within the time specified. If the bidder is not able to meet the specified delivery date, he is required to notify the Chief Procurement Officer of such delay. Notification shall be in writing and shall be receive by the Chief Procurement Officer at least twenty-four (24) hours before the specified delivery date. Notification of delay shall include an explanation of the causes and reasons for the delay including statement(s) from supplier or shipping company causing the delay. The Government reserves the right to reject delay justification if, in the opinion of the Chief Procurement Officer, such justification is not adequate.

[X] 41. **LIQUIDATED DAMAGES**: When the contractor is given notice of delay or nonperformance as specified in Paragraph 1 (Default) of the Termination for Default Clause of this contract and fails to cure in the time specified, the contractor shall be liable for damages for delay in the amount of one-fourth of one percent (1%) of outstanding order per calendar day from date set for cure until either the territory reasonable obtains similar supplies or services if the contractor is terminated for default, or until the contractor provides the supplies or services if the contractor is not terminated for default. To the extent that the contractor's delay or nonperformance is excused under Paragraph 40 (Excuse for Nonperformance or Delayed Performance) of the Termination for Default Clause of this contract, liquidated damages shall not e due the territory. The contractor remains liable for damages caused other than by delay (GPR Section 6-101-09.1).

[X] 42. **PHYSICAL LIABILITY**: If it becomes necessary for the Vendor, either as principal, agent or employee, to enter upon the premises or property of the Government of Guam in order to construct, erect, inspect, make delivery or remove property hereunder, the Vendor hereby covenants and agrees to take, use, provide and make all proper, necessary and sufficient precautions, safeguards and protections against the occurrence of any accidents, injuries or damages to any person or property during the progress of the work herein covered, and to be responsible for, and to indemnify and save harmless the Government of Guam from the payment of all sums of money by reason of all or any such accidents, injuries or damages that may occur upon or about such work, and fines, penalties and loss incurred for or by reasons of the violations of any territorial ordinance, regulations, or the laws of Guam or the United States, while the work is in progress. Contractor will carry insurance to indemnify the Government of Guam against any claim for loss, damage or injury to property or persons arising out of the performance of the Contractor or his employees and agents of the services covered by the contract and the use, misuse or failure of any equipment used by the contractor or his employees or agents, and shall provide certificates of such insurance to the Government of Guam when required.

[X] 43. **CONTACT FOR CONTRACT ADMINISTRATION**: If your firm receives a contract as a result of this Solicitation, please designate a person whom we may contact for prompt administration.

Name: _____ Title: _____

Address: _____ Telephone: _____

_____

_____

GOVERNMENT OF GUAM

SEALED BID SOLICITAITON INSTRUCTIONS

1. **BID FORMS:** Each bidder shall be provided with two (2) sets of Solicitation forms. Additional copies may be provided upon request. Bidders requesting additional copies of said forms will be charged per page in accordance with Section 6114 of the Government Code of Guam. All payments for this purpose shall be by cash, certified check or money order and shall be made payable to the Guam Power Authority.

2. **PREPARATIONS OF BIDS:**
   a) Bidders are required to examine the drawings, specifications, schedule, and all instructions. Failure to do so will be at bidder's risk.
   b) Each bidder shall furnish the information required by the Solicitation. The bidder shall sign the solicitation and print or type his name on the Schedule. Erasures or other changes must be initialed by the person signing the bid. Bids signed by an agent are to be accompanied by evidence of this authority unless such evidence has been previously furnished to the issuing office.
   c) Unit price for each unit offered shall be shown and such price shall include packing unless otherwise specified. A total shall be entered in the amount column of the Schedule for each item offered. In case
   of discrepancies between a unit price and extended price, the unit price will be presumed to be correct.
   d) Bids for supplies or services other than those specified will not be considered.
   Time, if stated as a number of days, means calendar days and will include Saturdays, Sundays, and holidays beginning the day after the issuance of a Notice to Proceed. Time stated ending on a Saturday, Sunday or Government of Guam legal holiday will end at the close of the next business day.

3. **EXPLANATION TO BIDDERS:** Any explanation desired by a bidder regarding the meaning or interpretation of the Solicitation, drawings, specifications, etc., must be submitted in writing and with sufficient time allowed for a written reply to reach all bidders before the submission of their bids. Oral explanations or instructions given before the award of the contract will not be binding. Any information given to a prospective bidder concerning a Solicitation will be furnished to all prospective bidders in writing as an amendment to the Solicitation if such information would be prejudicial to uninformed bidders.

4. **ACKNOWLEDGEMENT OF AMENDMENTS TO SOLICITATIONS:** Receipt of an amendment to a Solicitation by a bidder must be acknowledged by signing an acknowledgement of receipt of the amendment.
   Such acknowledgement must be received prior to the hour and date specified for receipt of bids.

5. **SUBMISSION OF BIDS:**
   a) Bids and modifications thereof shall be enclosed in sealed envelopes and addressed to the office specified in the Solicitation. The bidder shall show the hour and date specified in the Solicitation for receipt, the Solicitation number, and the name and address of the bidder on the face of the envelope.
   b) Telegraphic bids will not be considered unless authorized by the Solicitation. However, bids may be modified or withdrawn by written or telegraphic notice, provided such notice is received prior to the hour and date specified for receipt (see paragraph 6 of these instructions).
   c) Samples of items, when required, must be submitted within the time specified, unless otherwise specified by the Government, at no expense to the Government. If not destroyed by testing, samples will be returned at bidder's request and expense, unless otherwise specified by the Solicitation.
   d) Samples or descriptive literature should not be submitted unless it is required on this solicitation. Regardless of any attempt by a bidder to condition the bid, unsolicited samples or descriptive literature will not be examined or tested at the bidder's risk, and will not be deemed to vary any of the provisions of this Solicitation.

6. **FAILURE TO SUBMIT BID:** If no bid is to be submitted, do not return the solicitation unless otherwise specified. A letter or postcard shall be sent to the issuing office advising whether future Solicitations for the type of supplies or services covered by this Solicitation are desired.

7. **LATE BID, LATE WITHDRAWALS, AND LATE MODIFICATIONS:**
   a) Definition: Any bid received after the time and date set for receipt of bids is late. Any withdrawal or modification of a bid received after the time and date set for opening of bids at the place designated for opening is late (Guam Procurement Regulations Section 3-202)
   b) Treatment: No late bid, late modification, or late withdrawal will be considered unless received before contract award, and the bid, modification, or withdrawal would have been timely but for the action or inaction of territorial personnel directly serving the procurement activity.

8. **DISCOUNTS:**
   a) Notwithstanding the fact that prompt payment discounts may be offered, such offer will not be considered in evaluating bids for award unless otherwise specified in the Solicitation. However, offered discounts will be taken if payment is made within the discount period, even though not considered in the evaluation of bids.
   b) In connection with any discount offered, time will be computed from date of delivery and acceptance of the supplies to the destination as indicated in the purchase order or contract. Payment is deemed to be made for the purpose of earning the discount on the date of mailing of the Government check.

9. **GOVERNMENT FURNISHED PROPERTY:** No material, labor or facilities will be furnished by the Government unless otherwise provided for in the Solicitation.

10. **SELLERS' INVOICES:** Invoices shall be prepared and submitted in quadruplicate (one copy shall be marked "original") unless otherwise specified. Invoices shall be "certified true and correct" and shall contain the following information: Contract and order number (if any), item numbers, description of supplies or services, sizes, quantities, unit prices, and extended total. Bill of lading number and weight of shipment will be shown for shipments made on Government bills of lading.

11. **RECEIPT, OPENING AND RECORDING OF BIDS:** Bids and modifications shall be publicly opened in the presence of one or more witnesses, at the time, date, and place designated in the Invitation for Bids. The name of each bidder, the bid price, and such other information as is deemed appropriate by the Procurement Officer, shall be read aloud and recorded, or otherwise made available. The names and addresses of required witnesses shall be recorded at the opening. The opened bids shall be available for public inspection except to the extent the bidder designates trade secrets or other proprietary data to be confidential as set forth in accordance with Section 12 below. Material so designated shall accompany the bid and shall be readily separable from the bid in order to facilitate public inspection of the non-confidential portion of the bid. Prices, makes and models or catalogue numbers of the items offered, deliveries, and terms of payment shall be publicly available at the time of bid opening regardless of any designation to the contrary (Guam Procurement Regulations Section 3-202.12.2).

12. **CONFIDENTIAL DATA:** The Procurement Officer shall examine the bids to determine the validity of any requests for nondisclosure of trade secrets and other proprietary date identified in writing. If the parties do not agree as to the disclosure of data, the Procurement Officer shall inform the bidders in writing what portions of the bid will be disclosed and that, unless the bidders protest under Chapter 9 of the Guam Procurement Act (P.L. 16-124), the bids will be so disclosed. The bids shall be opened to public inspection subject to any continuing prohibition on the disclosure of confidential data (Guam Procurement Regulations Section 3-202.12.3).

13. **MULTI-STEP SEALED BIDDING:**

a. It is defined as two-phase process consisting of a technical first-phase composed of one or more steps in which bidders submit unpriced technical offers to be evaluated by the territory, and a second-phase in which those bidders whose technical offers are determined to be acceptable during the first-step have their priced bids considered. It is designed to obtain the benefits of competitive sealed bidding by award of a contract to t h lowest responsive, responsible bidder, and at the same time obtained the benefits of the competitive sealed proposals procedure through the solicitation of technical offers and the conduct of discussions to evaluate and determine the acceptability of technical offers.

b. In addition to the requirements set forth in the General Terms and Conditions and the Special provisions, the following applies:
   1). only unpriced technical offers are requested in the first phase;
   2). priced bids will be considered only in the second phase and only from bidders whose unpriced technical offers are found acceptable in the first phase;
   3). the criteria to be used in the evaluation at those specified in the Special Provisions and the General Terms and Conditions;
   4). the territory, to the extent the Procurement Officer finds necessary, may conduct oral or written discussion of the unpriced technical offers;
   5). the bidders, may designate those portions of the unpriced technical offers which contain trade secrets or other proprietary data which are to remain confidential; and,
   6). the service being procured shall be furnished generally in accordance with bidder's technical offer as found to be finally acceptable and shall meet the requirements of the Invitation for Bids.

c. **RECEIPT AND HANDLING OF UNPRICED TECHNICAL OFFERS.**
Unpriced technical offers shall not be opened publicly, but shall be opened in front of two or more procurement officials. Such offers shall not be disclosed to unauthorized persons. Bidders may request nondisclosure of trade secrets and other proprietary data identified in writing.

d. **EVALUATION OF UNPRICED TECHNICAL OFFERS.**
The unpriced technical offers submitted by bidders shall be evaluated solely in accordance with the criteria set forth in the Invitation for Bids. The unpriced technical offers shall be categorized as:
   1). acceptable;
   2). potentially acceptable, that is, reasonably susceptible of being made acceptable; or
   3). unacceptable. The Procurement Officer shall record in writing the basis for finding an offer unacceptable and make it part of the procurement file.

   The Procurement Officer may initiate Phase Two of the procedure if, in the Procurement Officer's opinion, there are sufficient acceptable unpriced technical offers to assure effective price competition in the second phase without technical discussions. If the Procurement Officer finds such is not the case, the Procurement Officer shall issue an amendment to the Invitation for Bids or engage in technical discussions as set forth in Subsection 3-202.20.5of this Section.

e. Upon the completion of Phase One, the Procurement Officer shall invite each acceptable bidder to submit a price bid. Upon submission of prices, the Procurement Officer shall prepare the final evaluation and reconsideration for the Chief Procurement Officer's approval.